Mechanical Engineering Case:

Audio Explorers, April 2026

Introduction and background

Current InstantFit earpieces and sealing limitations

Current InstantFit earpieces (e.g. domes) are typically manufactured from soft silicone and offered in a limited number of standard sizes. To accommodate variation in ear canal size and shape, Hearing Care Professionals select the dome size that best fits the individual user.

To reduce the occlusion effect that occurs when the ear canal is closed, vents are integrated into the earpiece and configured through the fitting software. These vents are designed to provide predefined acoustic behavior. However, this relies on the assumption that the earpiece seals reliably against the ear canal wall.

In practice, achieving a consistent seal with InstantFit earpieces is challenging. Large anatomical variation, noncircular or bent ear canals, and local deformation or folding of the earpiece can result in unintended leakage. When the seal is compromised, the actual venting differs from the intended design, leading to reduced control of acoustics, lower feedback margin, and less predictable performance.

Improving the mechanical sealing of InstantFit earpieces therefore represents a key opportunity to enhance acoustic robustness while maintaining comfort, usability, and manufacturability.

Current earpieces (domes) and sizes

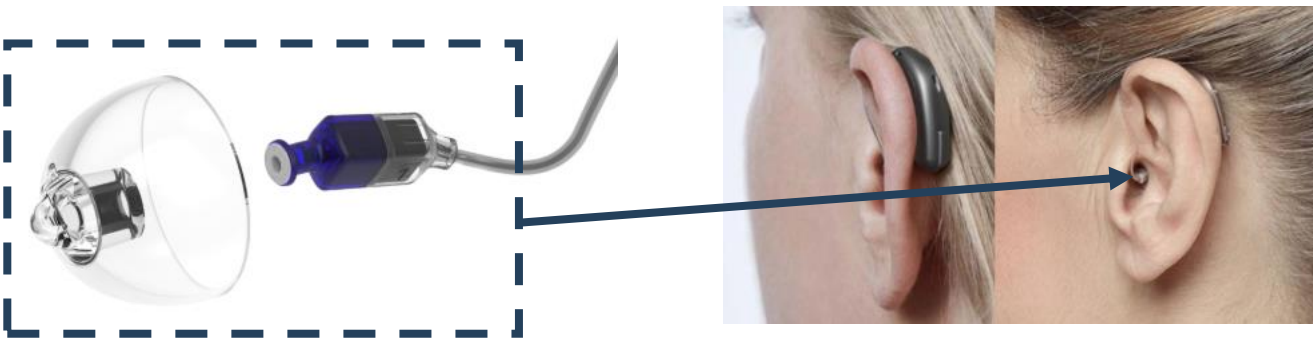

Speaker unit with earpiece (dome)

Sealing challenge description:

Achieving a reliable seal with InstantFit earpieces is mechanically challenging due to large variation in ear canal anatomy. Ear canals are often noncircular, locally constricted, or bent, which can lead to gaps, folding, or uneven contact between the earpiece and the ear canal wall.

When sealing is compromised, the intended venting behavior is no longer controlled by design, resulting in reduced acoustic predictability and feedback margin.

The challenge is to design an InstantFit earpiece that e.g. adapts mechanically to the ear canal variation and maintains a stable seal under real-world anatomical conditions. Your solution should clearly show where sealing fails today and how the proposed design improves sealing performance.

Examples showing challenges of making a sealing instant earpiece:

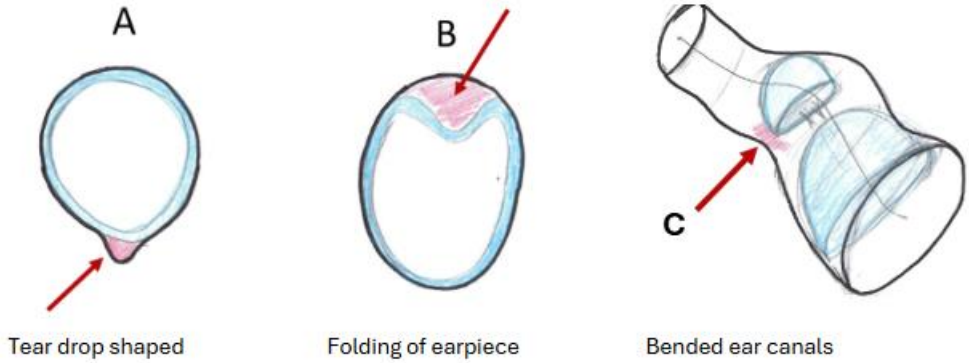

Examples of leakage challenges in ear canals

As a part of the case ear scanning of right ears can be used as a part of the case.
See Impressions zip file.

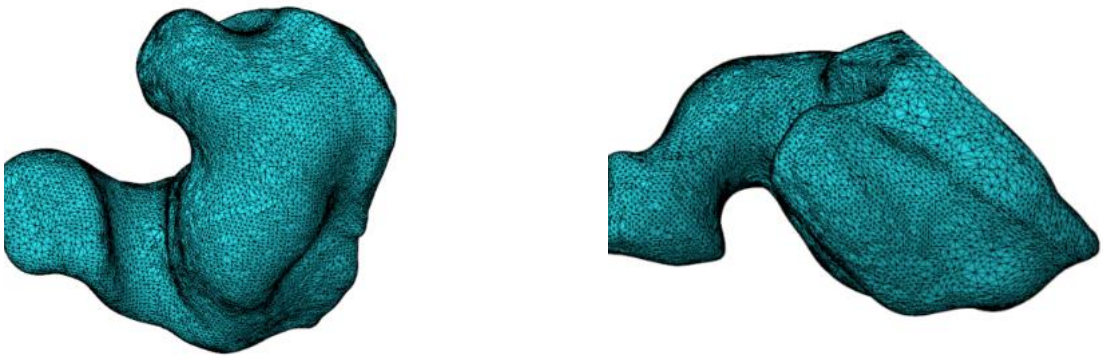

Example of right ear scanning

The case

The task is to design a new InstantFit (off-the-shelf) earpiece with improved sealing properties towards the ear canal, while remaining compatible with Oticon's MiniFit receiver interface used in Demant hearing aids.

The objective is to achieve a reliable and predictable seal across a wide range of ear canal geometries, enabling better control of venting, increased feedback margin, and more consistent acoustic performance. The solution must focus on mechanical design and be suitable for high-volume manufacturing.

Design a new type of instant (off-the-shelf) earpiece using MiniFit interface

The challenge is to improve sealing through mechanical design, such as geometry, structures, material choice, or compliance, so the earpiece can adapt to anatomical variation while maintaining comfort and usability.

You may redesign the overall shape or focus on a specific feature or detail. Inspiration may be taken from other industries or nature. The solution must be mechanical in nature, suitable for high-volume manufacturing, and clearly demonstrate why it seals better than existing InstantFit solutions.

Technical Descriptions of current earpieces and MiniFit interface:

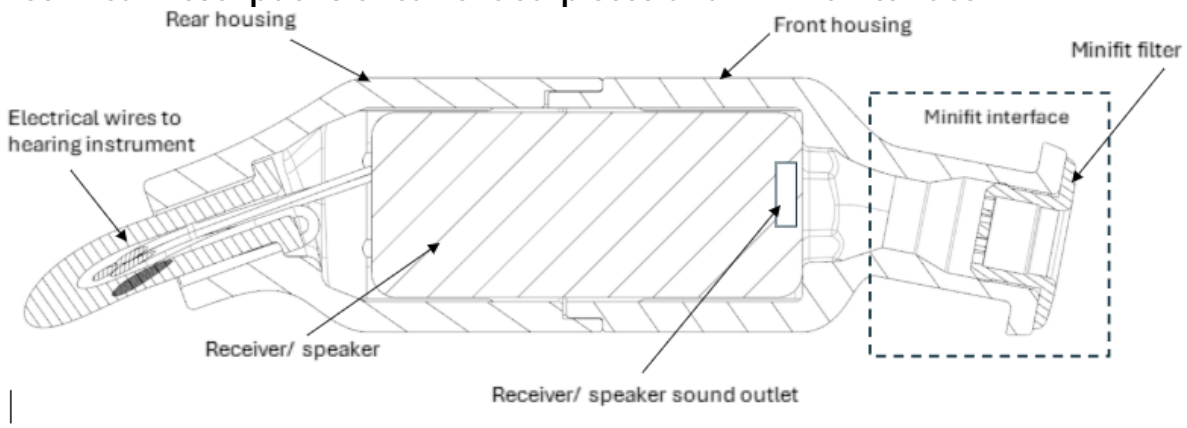

Section view of speaker unit assembly

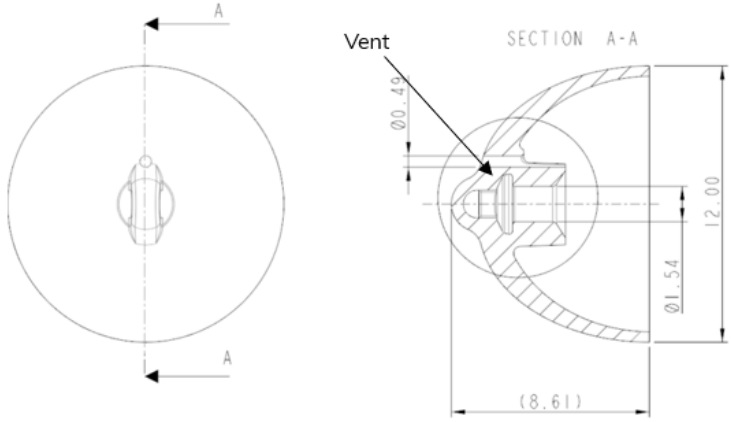

Ex. of size 12mm dome with single vent

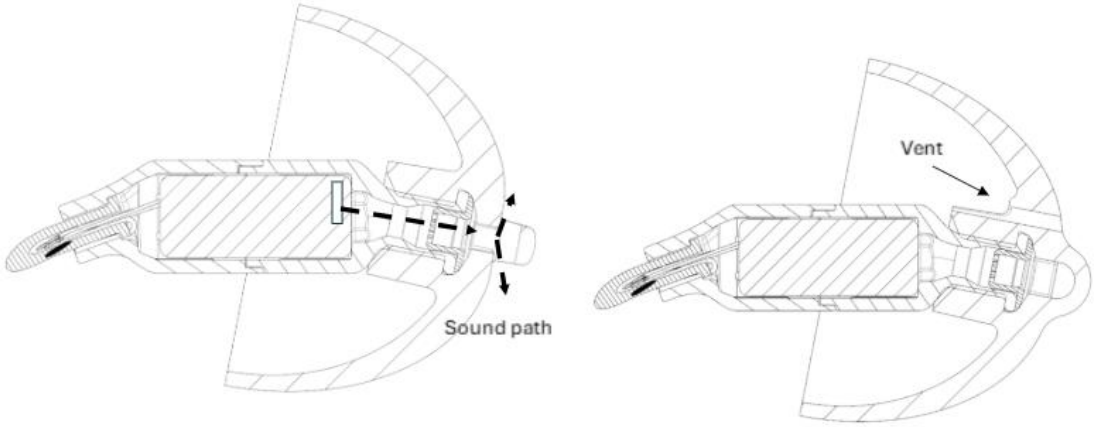

Assembly section view A-A

Assembly section view B-B

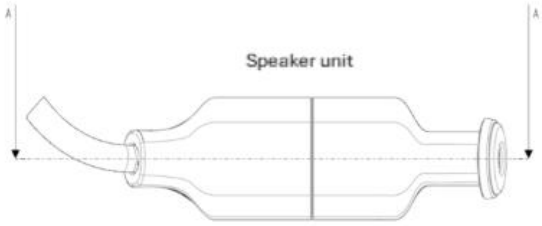

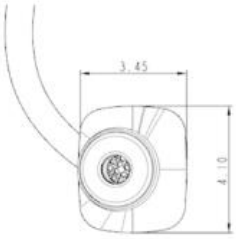

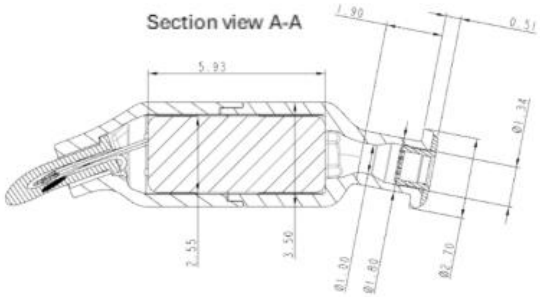

The solution

The solution must solve the stated challenge. It does not necessarily have to be a finalized solution – you can also focus on either a concept or a specific detail that is more thoroughly engineered.

The engineering disciplines involved can include concept development, optimizations, CAD modeling, user-centered design, material science, mechanical design, generative design, or manufacturing technologies.

Make sure that the solution is well supported by, for example, chosen DFM methods, concept sketches, CAD models, prototypes, user evaluation, or calculations.

Delivery

There is no strict format for the delivery method. You can present your solution as a report, poster, slideshow, video, brochure, etc., where you describe your idea, technical feasibility, how you tested your methods, and what results you obtained. However, we would like to emphasize that you are <u>not</u> required to hand in a full solution/implementation. The focus is on your innovative and creative thinking in approaching this challenge.

Your submission must contain:

- The name of each group member, affiliation and current semester you are in

We must have all solutions in hand no later than April 12th at 12pm. You can send your solutions:

- By regular post (Ann Bredvig, Demant, Kongebakken 9, 2765 Smørum)
- By email (abrv@demant.com)
- Or simply drop by and hand them in.
    - If you choose the last option, ask for Ann Bredvig at the reception.

Announcing the winners

The winning teams will be given direct notification via email or phone.

We hope you will find the challenge exciting and fun to work on, and we look forward to seeing your solutions.

Let the engineering case competition begin!

Greetings,
The Audio Explorers Team